CAGEC	DWG NO	SH	REV	
1K3H5	700085		—	1

REVISIONS

REV	DESCRIPTION	DATE	APPROVED

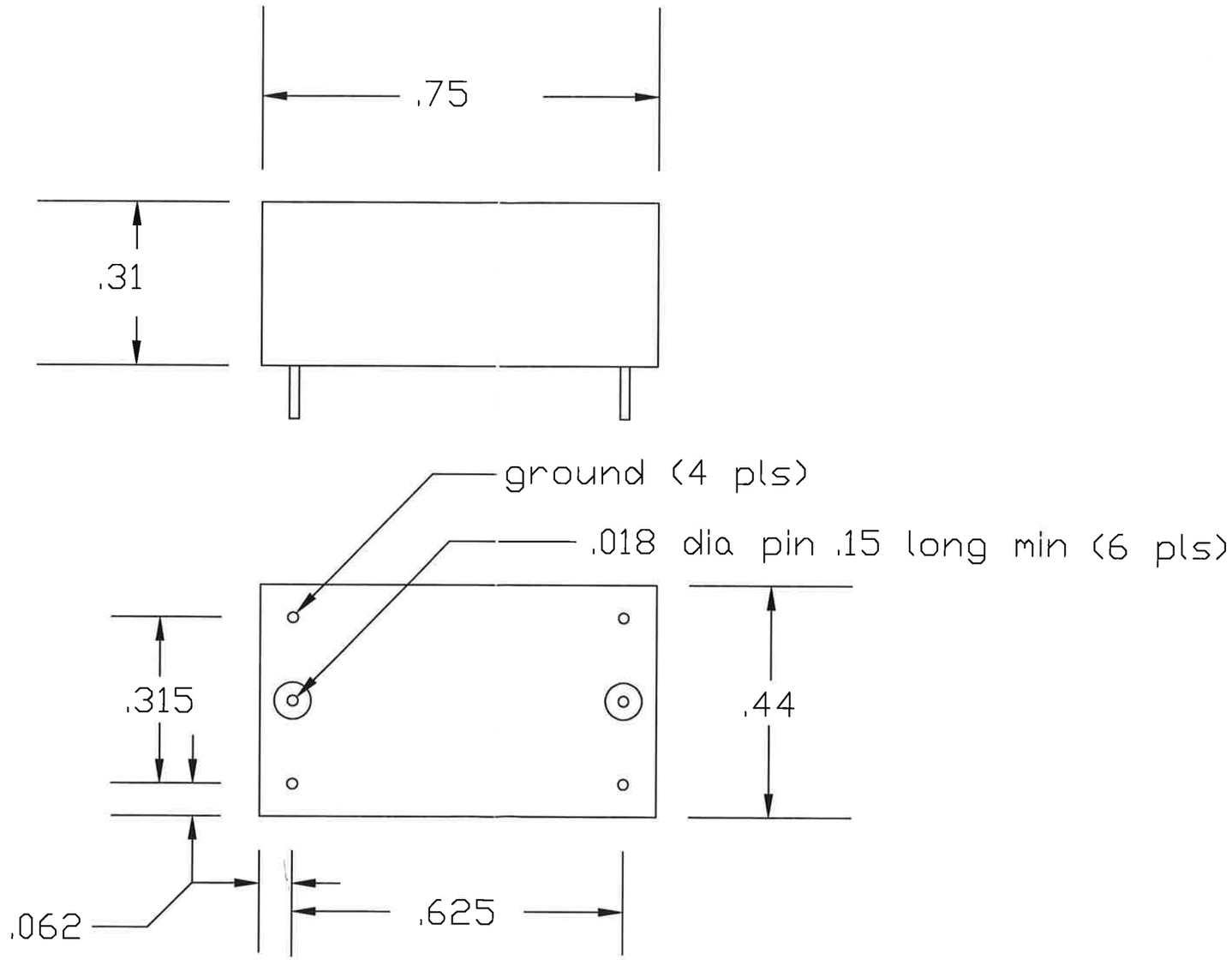

UNLESS OTHERWISE SPECIFIED DIMENSIONS ARE IN INCHES & TOLERANCES ARE: .XXX ±.005 .XX ±.01 ANGLES	CAD GENERATED DRAWING DO NOT MANUALLY UPDATE		BREE ENGINEERING
MATERIAL	DWN LN	DATE 9-10-02	OUTLINE
	CHK	9/11/02	
	RESP ENG		
	MFG ENG		
FINISH NICKEL QQ-N-290A	QUAL ENG		SIZE B · CAGE CODE 1K3H5 · DWG NO 700085 · REV —
	Scale for REFERENCE ONLY		SCALE TBD · SHEET 1 OF 1

THE INFORMATION CONTAINED IN THIS DRAWING IS THE SOLE PROPERTY OF BREE ENGINEERING. ANY REPRODUCTION IN PART OR WHOLE WITHOUT THE WRITTEN PERMISSION OF BREE ENGINEERING IS PROHIBITED.

B

A

4 3 2 1